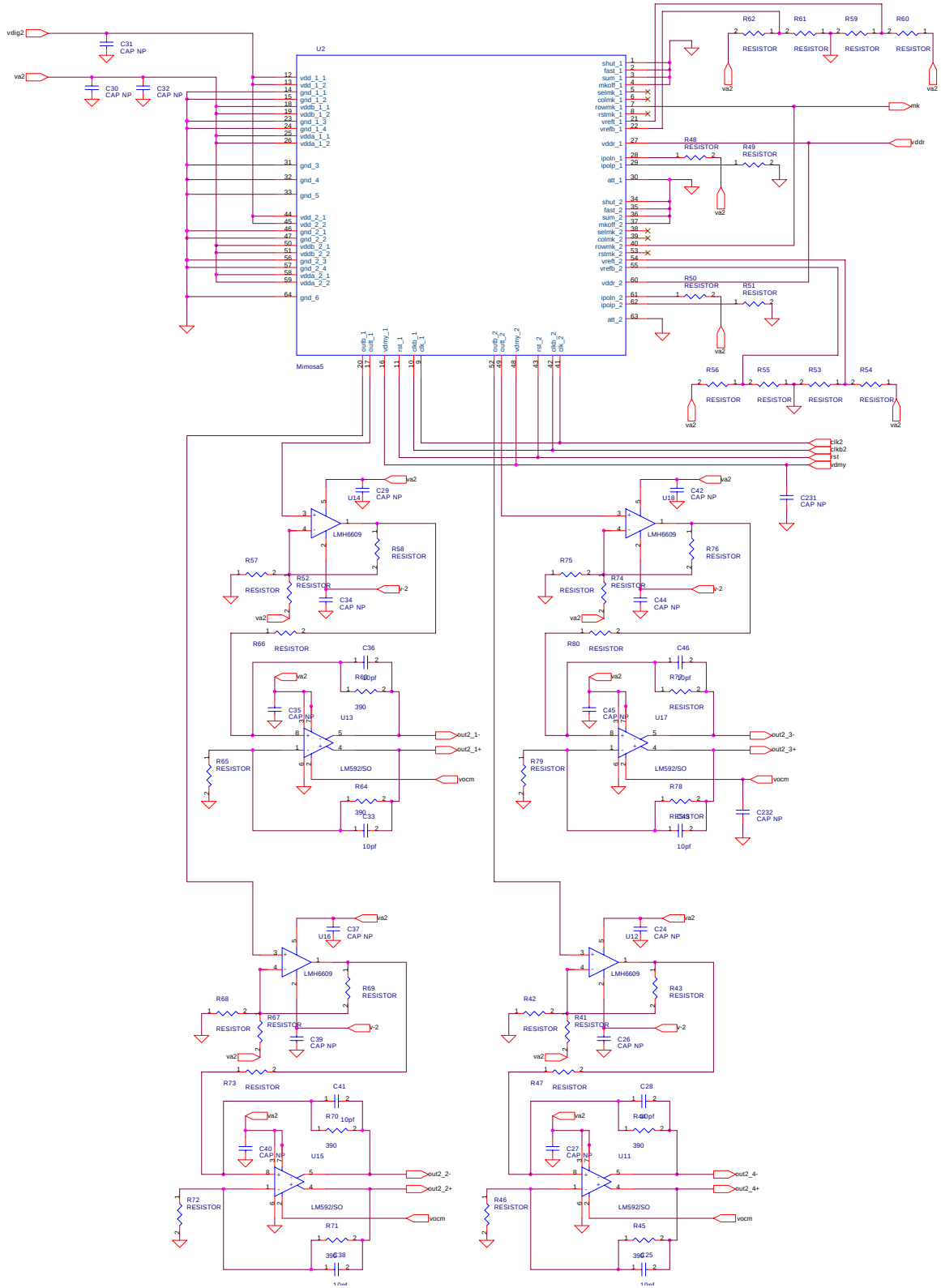
vdig2
va2
C31
CAP NP
C30
CAP NP
C32
CAP NP
U2
Mimosa5
vdd_1_1
vdd_1_2
gnd_1_1
gnd_1_2
vddb_1_1
vddb_1_2
gnd_1_3
gnd_1_4
vdda_1_1
vdda_1_2
gnd_3
gnd_4
gnd_5
vdd_2_1
vdd_2_2
gnd_2_1
gnd_2_2
vddb_2_1
vddb_2_2
gnd_2_3
gnd_2_4
vdda_2_1
vdda_2_2
gnd_6
shut_1
fast_1
sum_1
mkoff_1
selmk_1
colmk_1
rowmk_1
rstmk_1
vreft_1
vrefb_1
vddr_1
ipoln_1
ipolp_1
att_1
shut_2
fast_2
sum_2
mkoff_2
selmk_2
colmk_2
rowmk_2
rstmk_2
vreft_2
vrefb_2
vddr_2
ipoln_2
ipolp_2
att_2
outb_1
out_1
vdmy_1
rst_1
clkb_1
clk_1
outb_2
out_2
vdmy_2
rst_2
clkb_2
clk_2
R62
R61
R59
R60
RESISTOR
mk
vddr
R48
R49
R50
R51
R56
R55
R53
R54
clk2
clkb2
rst
vdmy
C29
CAP NP
U14
LMH6609
R58
RESISTOR
R57
R52
C34
CAP NP
v-2
R66
C36
10pf
390
C35
CAP NP
U13
LM592/SO
out2_1-
out2_1+
vocm
R65
R64
C33
10pf
C42
CAP NP
U18
R76
R75
R74
C44
CAP NP
R80
C46
R70
R45
C45
CAP NP
U17
out2_3-
out2_3+
R79
R78
C232
CAP NP
C37
CAP NP
U16
R69
R68
R67
C39
CAP NP
R73
C41
R70
C40
CAP NP
U15
out2_2-
out2_2+
R72
R71
C38
C24
CAP NP
U12
R43
R42
R41
C26
CAP NP
R47
C28
R40
C27
CAP NP
U11
out2_4-
out2_4+
R46
R45
C25